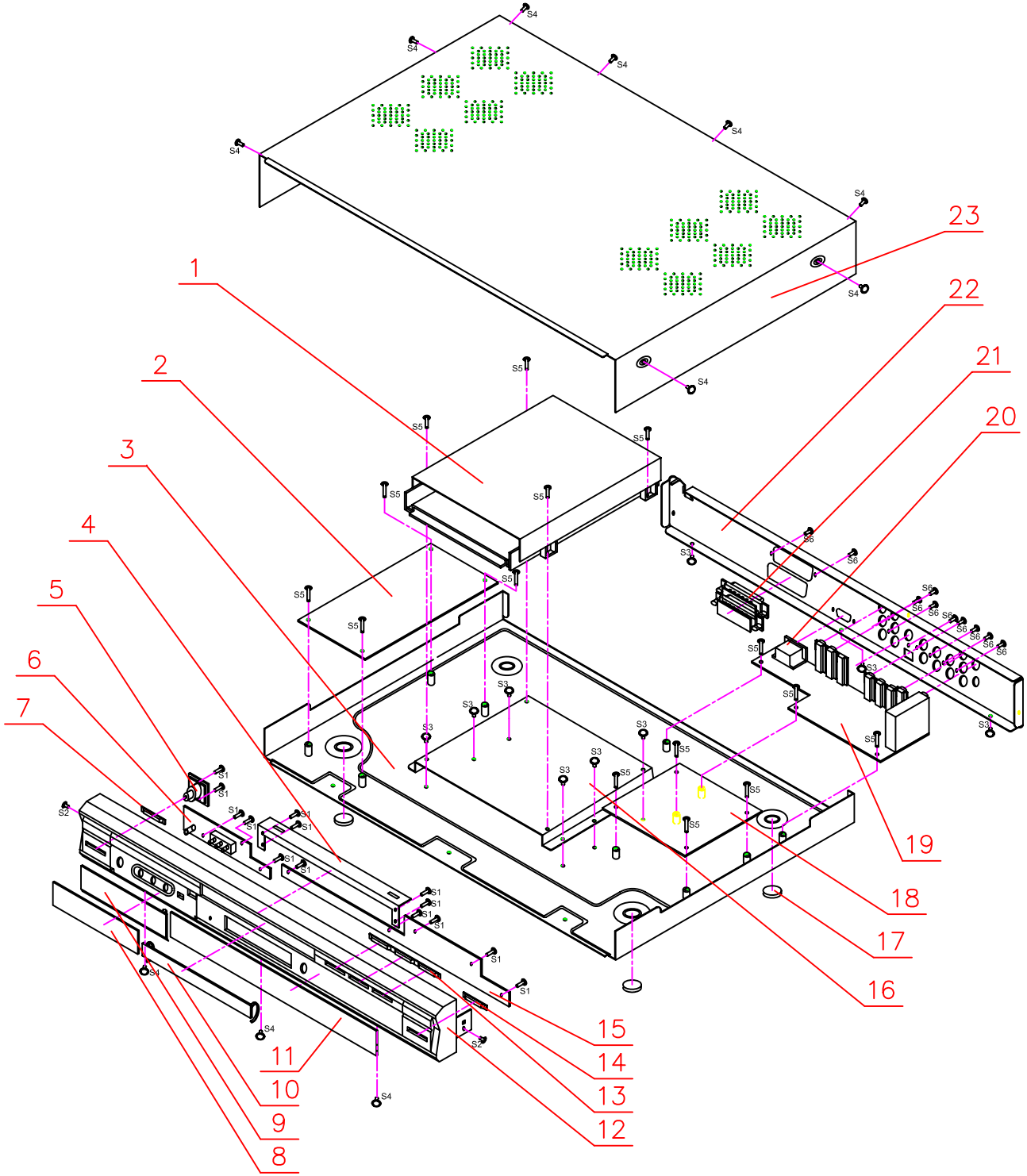

俄罗斯Elenberg	
LOGO：ELENBERG	
MODEL：DVDR-610	

Item	Description	Qty	Item	Description	Qty
23	COVER	1			
22	BACKBOARD	1			
21	SCART	1			
20	VGA	1	S1	3×8PTHNi+	14
19	Export board	1	S2	3×6FMHNi+	2
18	INPUT ASS'Y	1	S3	3×4PWMHNi+	9
17	WASHER	4	S4	3×6PWMHNi+	11
16	BRACKET	1	S5	3×6PMHNi+	11
15	DISPLAY PCB	1	S6	3×8PTHNi+	9
14	RIGHT KEY	1			
13	FUNCTION KEY	1			
12	PANEL	1			
11	LENS(2)	1			
10	DISK DOOR	1			
9	DECORATION DOOR	1			
8	lens(1)	1			
7	LEFT KEY	1			
6	Export board	1			
5	POWER SWITCH	1			
4	bracket of front panel	1			
3	MOTHERBOARD	1			
2	power board	1			
1	Mechanism Ass'y	1			

History	
D4:IN4148-->NC R37:1K-->R	2004/07/02
R52,R69,R78:27-->47 R55,R72,R79:47-->100	2004/07/09
V6 version: add SCART out	2004/07/12

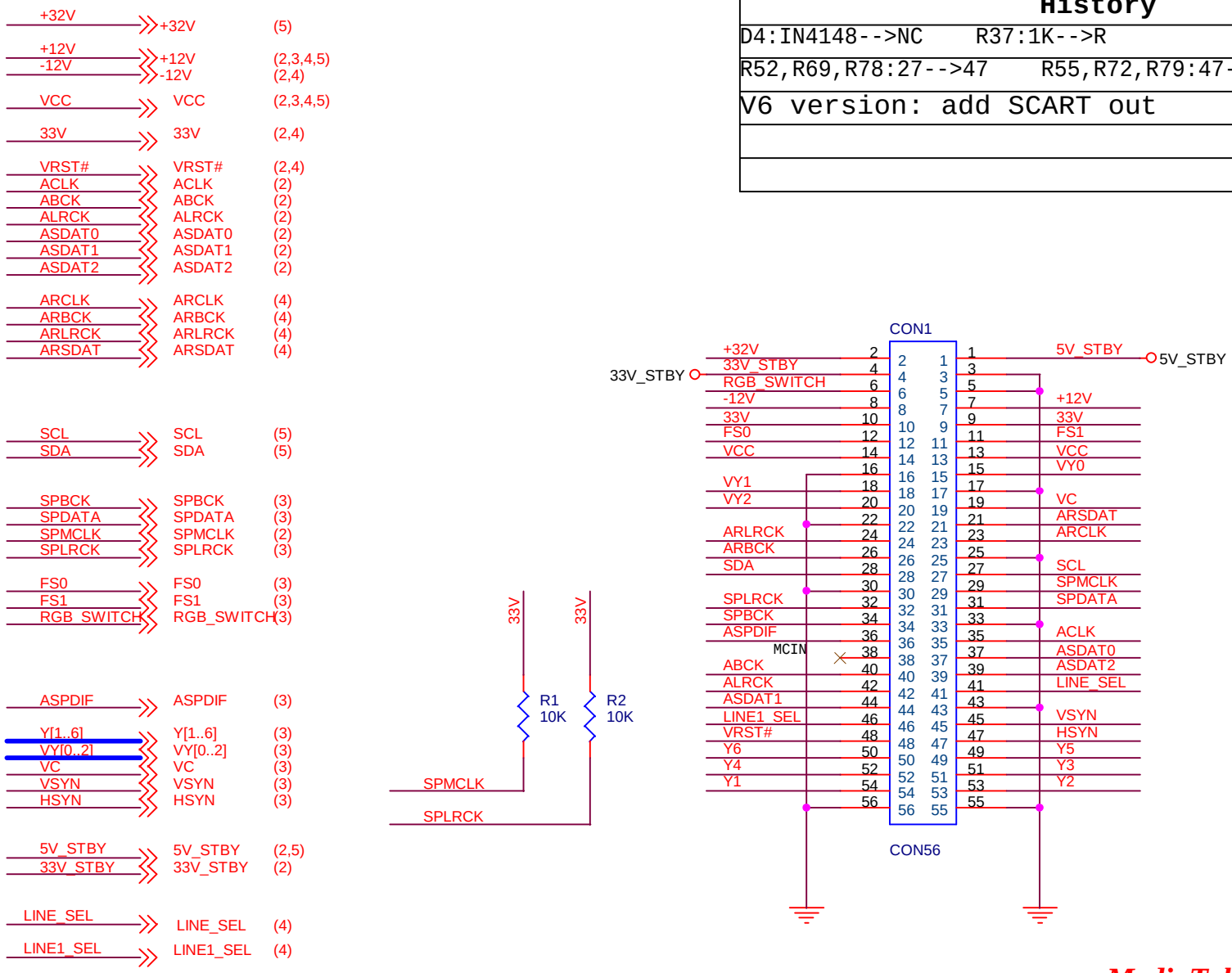

MediaTek Confidential

MediaTek Inc. No.1-2, Innovation Rd 1, SBIP, Hsin-Chu City 300 TEL:(03)567-0766 FAX:(03)578-7610

Title: AV PORT

Size	Document Number	Drawn	Rev
A	AVBOARD_V5		1.0

Date: Friday, August 27, 2004 Sheet 1 of 5

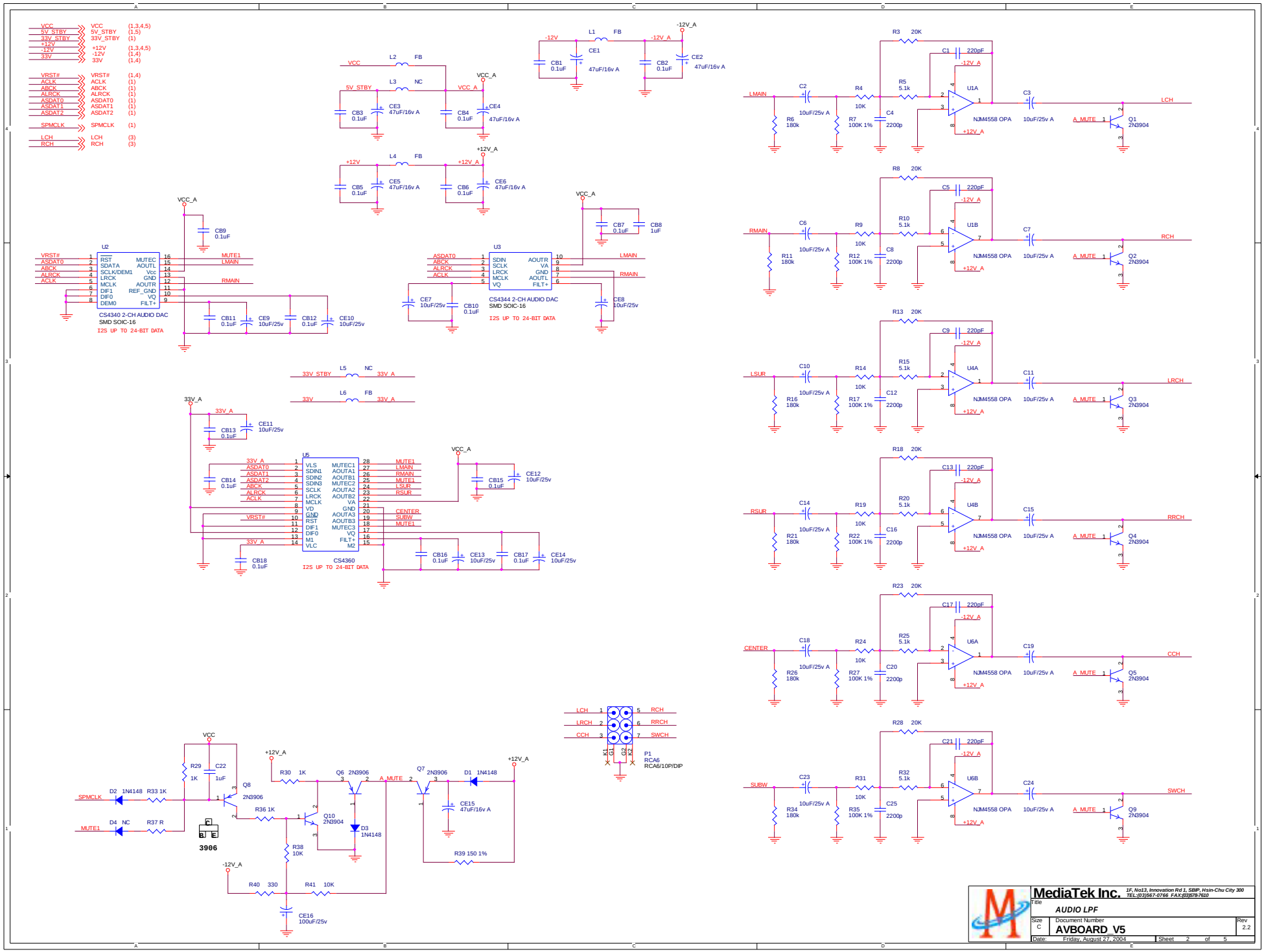
VCC 5V_STBY 33V_STBY +12V -12V 33V
VCC (1,3,4,5) 5V_STBY (1,5) 33V_STBY (1) +12V (1,3,4,5) -12V (1,4) 33V (1,4)
VRST# ACLK ABCK ALRCK ASDAT0 ASDAT1 ASDAT2
VRST# (1,4) ACLK (1) ABCK (1) ALRCK (1) ASDAT0 (1) ASDAT1 (1) ASDAT2 (1)
SPMCLK
SPMCLK (1)
LCH RCH
LCH (3) RCH (3)
L1 FB -12V -12V_A CB1 0.1uF CE1 47uF/16v A CB2 0.1uF CE2 47uF/16v A
L2 FB VCC VCC_A 5V_STBY L3 NC CB3 0.1uF CE3 47uF/16v A CB4 0.1uF CE4 47uF/16v A
L4 FB +12V +12V_A CB5 0.1uF CE5 47uF/16v A CB6 0.1uF CE6 47uF/16v A
U2 CS4340 2-CH AUDIO DAC SMD SOIC-16
I2S UP TO 24-BIT DATA
RST SDATA SCLK/DEM1 LRCK MCLK DIF1 DIF0 DEM0 MUTEC AOUTL Vcc GND AOUTR REF_GND VQ FILT+
MUTE1 LMAIN RMAIN
CB9 0.1uF CB11 0.1uF CE9 10uF/25v CB12 0.1uF CE10 10uF/25v
U3 CS4344 2-CH AUDIO DAC SMD SOIC-16
I2S UP TO 24-BIT DATA
SDIN SCLK LRCK MCLK VQ AOUTR VA GND AOUTL FILT+
ASDAT0 ABCK ALRCK ACLK
CB7 0.1uF CB8 1uF CE7 10uF/25v CB10 0.1uF CE8 10uF/25v
L5 NC 33V_STBY 33V_A
L6 FB 33V 33V_A
CB13 0.1uF CE11 10uF/25v
U5 CS4360
I2S UP TO 24-BIT DATA
VLS SDIN1 SDIN2 SDIN3 SCLK LRCK MCLK VD GND RST DIF1 DIF0 M1 VLC MUTEC1 AOUTA1 AOUTB1 MUTEC2 AOUTA2 AOUTB2 VA GND AOUTA3 AOUTB3 MUTEC3 VQ FILT+ M2
ASDAT0 ASDAT1 ASDAT2 ABCK ALRCK ACLK VRST#
MUTE1 LMAIN RMAIN MUTE1 LSUR RSUR CENTER SUBW MUTE1
CB14 0.1uF CB15 0.1uF CE12 10uF/25v CB16 0.1uF CE13 10uF/25v CB17 0.1uF CE14 10uF/25v CB18 0.1uF
R29 1K C22 1uF Q8 2N3906 SPMCLK D2 1N4148 R33 1K MUTE1 D4 NC R37 R
3906
R30 1K Q6 2N3906 R36 1K Q10 2N3904 R38 10K D3 1N4148 A_MUTE Q7 2N3906 D1 1N4148 CE15 47uF/16v A R39 150 1%
R40 330 R41 10K CE16 100uF/25v
LCH LRCH CCH RCH RRCH SWCH K1 G1 G2 K2 P1 RCA6 RCA6/10P/DIP
R3 20K C1 220pF LMAIN C2 10uF/25v A R6 180k R4 10K R7 100K 1% R5 5.1k C4 2200p U1A NJM4558 OPA C3 10uF/25v A A_MUTE Q1 2N3904 LCH
R8 20K C5 220pF RMAIN C6 10uF/25v A R11 180k R9 10K R12 100K 1% R10 5.1k C8 2200p U1B NJM4558 OPA C7 10uF/25v A A_MUTE Q2 2N3904 RCH
R13 20K C9 220pF LSUR C10 10uF/25v A R16 180k R14 10K R17 100K 1% R15 5.1k C12 2200p U4A NJM4558 OPA C11 10uF/25v A A_MUTE Q3 2N3904 LRCH
R18 20K C13 220pF RSUR C14 10uF/25v A R21 180k R19 10K R22 100K 1% R20 5.1k C16 2200p U4B NJM4558 OPA C15 10uF/25v A A_MUTE Q4 2N3904 RRCH
R23 20K C17 220pF CENTER C18 10uF/25v A R26 180k R24 10K R27 100K 1% R25 5.1k C20 2200p U6A NJM4558 OPA C19 10uF/25v A A_MUTE Q5 2N3904 CCH
R28 20K C21 220pF SUBW C23 10uF/25v A R34 180k R31 10K R35 100K 1% R32 5.1k C25 2200p U6B NJM4558 OPA C24 10uF/25v A A_MUTE Q9 2N3904 SWCH
MediaTek Inc.
1F, No13, Innovation Rd 1, SBIP, Hsin-Chu City 300
TEL:(03)567-0766 FAX:(03)579-7610
Title AUDIO LPF
Size C Document Number AVBOARD_V5 Rev 2.2
Date: Friday, August 27, 2004 Sheet 2 of 5

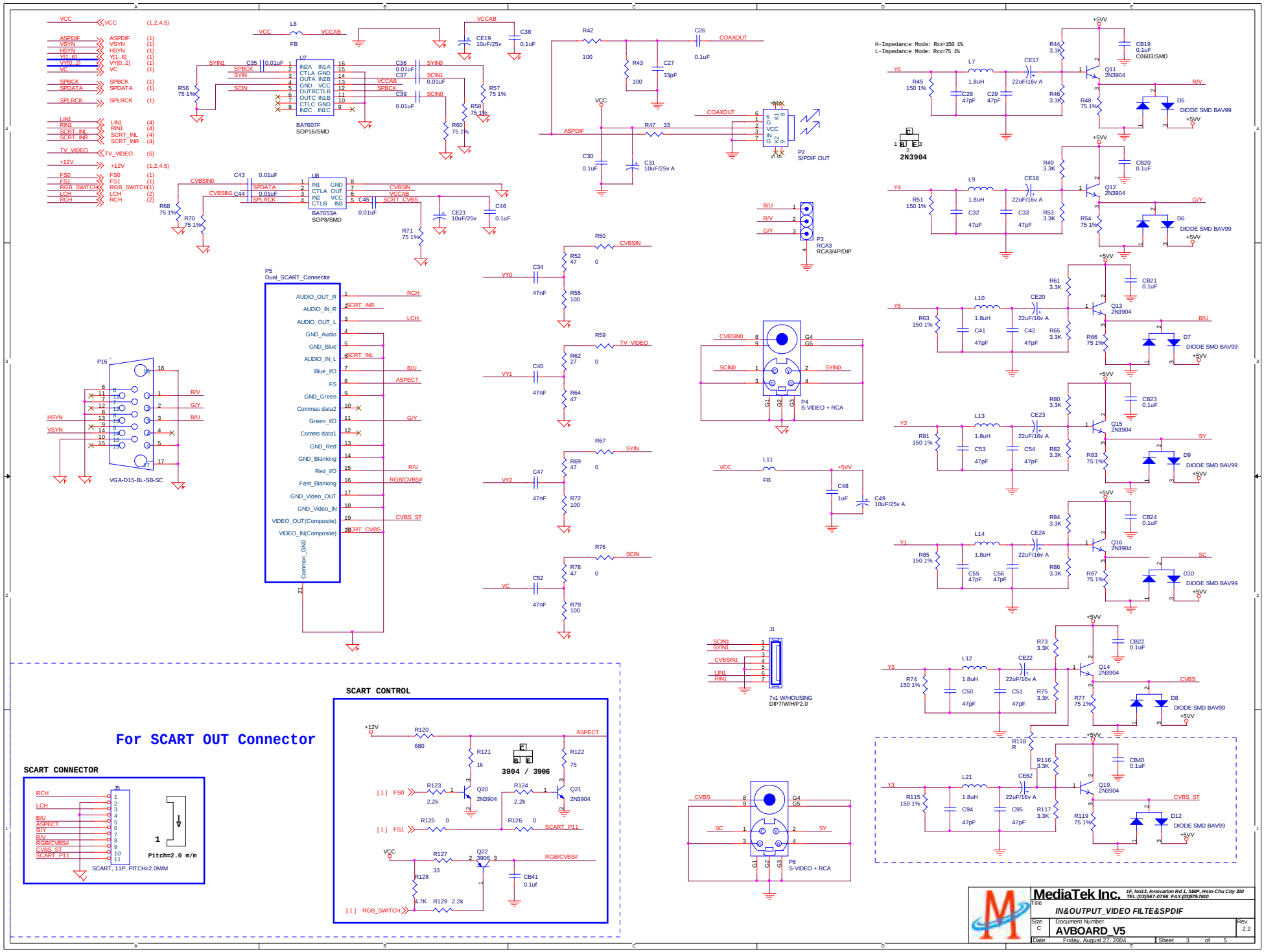
VCC (1,2,4,5)
ASPDIF (1)
VSYN (1)
HSYN (1)
Y[1..6] (1)
VY[0..2] (1)
VC (1)
SPBCK (1)
SPDATA (1)
SPLRCK (1)
LIN1 (4)
RIN1 (4)
SCRT_INL (4)
SCRT_INR (4)
TV_VIDEO (5)
+12V (1,2,4,5)
FS0 (1)
FS1 (1)
RGB_SWITCH (1)
LCH (2)
RCH (2)
L8
FB
U7
BA7607F
SOP16/SMD
CE19 10uF/25v
C38 0.1uF
R42 100
R43 100
C27 33pF
C26 0.1uF
COAXOUT
C30 0.1uF
C31 10uF/25v A
R47 33
P2
S/PDIF OUT
U8
BA7653A
SOP8/SMD
CE21 10uF/25v
C46 0.1uF
P3
RCA3
RCA3/4P/DIP
P5
Dual_SCART_Connector
AUDIO_OUT_R
AUDIO_IN_R
AUDIO_OUT_L
GND_Audio
GND_Blue
AUDIO_IN_L
Blue_I/O
FS
GND_Green
Commas data2
Green_I/O
Comms data1
GND_Red
GND_Blanking
Red_I/O
Fast_Blanking
GND_Video_OUT
GND_Video_IN
VIDEO_OUT(Composite)
VIDEO_IN(Composite)
Common_GND
P16
VGA-D15-BL-SB-SC
P4
S-VIDEO + RCA
L11
FB
C48 1uF
C49 10uF/25v A
J1
7x1 W/HOUSING
DIP7/W/HP2.0
P6
S-VIDEO + RCA
H-Impedance Mode: Rxx=150 1%
L-Impedance Mode: Rxx=75 1%
2N3904
DIODE SMD BAV99
SCART CONTROL
3904 / 3906
Q20 2N3904
Q21 2N3904
Q22 3906
For SCART OUT Connector
SCART CONNECTOR
SCART, 11P, PITCH=2.0M/M
Pitch=2.0 m/m
MediaTek Inc.
1F, No13, Innovation Rd 1, SBIP, Hsin-Chu City 300
TEL:(03)567-0766 FAX:(03)5676610
Title
IN&OUTPUT_VIDEO FILTE&SPDIF
Size C
Document Number
AVBOARD_V5
Rev 2.2
Date: Friday, August 27, 2004
Sheet 3 of 5

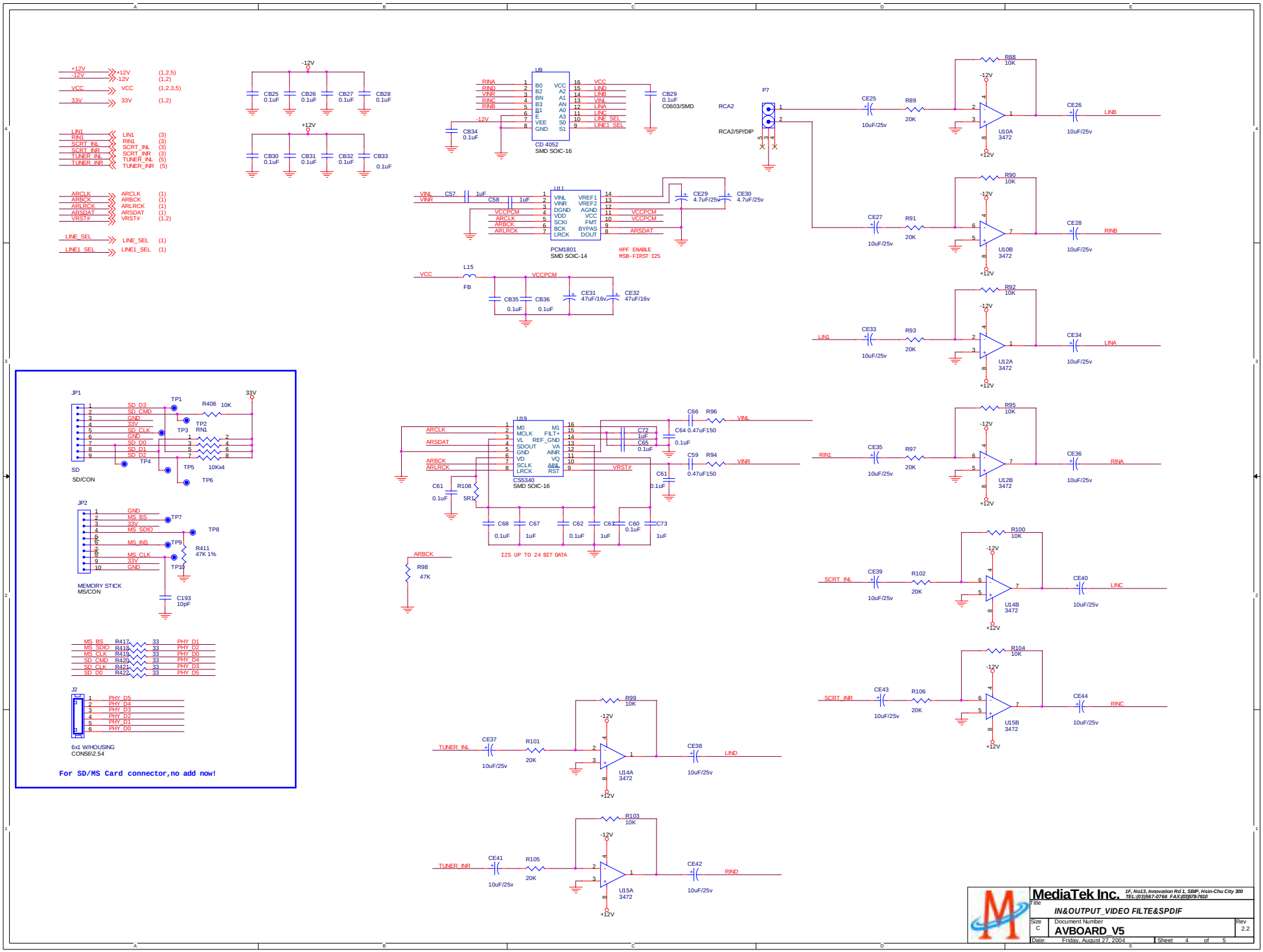
+12V (1,2,5)
-12V (1,2)
VCC (1,2,3,5)
33V (1,2)
LIN1 (3)
RIN1 (3)
SCRT_INL (3)
SCRT_INR (3)
TUNER_INL (5)
TUNER_INR (5)
ARCLK (1)
ARBCK (1)
ARLRCK (1)
ARSDAT (1)
VRST# (1,2)
LINE_SEL (1)
LINE1_SEL (1)
CB25 0.1uF
CB26 0.1uF
CB27 0.1uF
CB28 0.1uF
CB30 0.1uF
CB31 0.1uF
CB32 0.1uF
CB33 0.1uF
U9
CD 4052
SMD SOIC-16
CB29 0.1uF C0603/SMD
CB34 0.1uF
U11
PCM1801
SMD SOIC-14
HPF ENABLE
MSB-FIRST I2S
C57 1uF
C58 1uF
CE29 4.7uF/25v
CE30 4.7uF/25v
L15
FB
CB35 0.1uF
CB36 0.1uF
CE31 47uF/16v
CE32 47uF/16v
U19
CS5340
SMD SOIC-16
I2S UP TO 24 BIT DATA
R98 47K
R108 5R1
C61 0.1uF
C68 0.1uF
C67 1uF
C62 0.1uF
C63 1uF
C60 0.1uF
C73 1uF
C72 1uF
C65 0.1uF
C64 0.47uF150
C66 R96
C59 R94
0.47uF150
P7
RCA2
RCA2/5P/DIP
R88 10K
R89 20K
CE25 10uF/25v
CE26 10uF/25v
U10A 3472
R90 10K
R91 20K
CE27 10uF/25v
CE28 10uF/25v
U10B 3472
R92 10K
R93 20K
CE33 10uF/25v
CE34 10uF/25v
U12A 3472
R95 10K
R97 20K
CE35 10uF/25v
CE36 10uF/25v
U12B 3472
R100 10K
R102 20K
CE39 10uF/25v
CE40 10uF/25v
U14B 3472
R104 10K
R106 20K
CE43 10uF/25v
CE44 10uF/25v
U15B 3472
R99 10K
R101 20K
CE37 10uF/25v
CE38 10uF/25v
U14A 3472
R103 10K
R105 20K
CE41 10uF/25v
CE42 10uF/25v
U15A 3472
JP1
SD/CON
R406 10K
RN1 10Kx4
JP2
MEMORY STICK
MS/CON
R411 47K 1%
C193 10pF
R417 33
R418 33
R419 33
R420 33
R421 33
R422 33
J2
6x1 W/HOUSING
CONS6\2.54
For SD/MS Card connector,no add now!
MediaTek Inc.
1F, No13, Innovation Rd 1, SBIP, Hsin-Chu City 300
TEL:(03)567-0766 FAX:(03)5676810
Title
IN&OUTPUT_VIDEO FILTE&SPDIF
Size C
Document Number
AVBOARD_V5
Rev 2.2
Date: Friday, August 27, 2004
Sheet 4 of 5

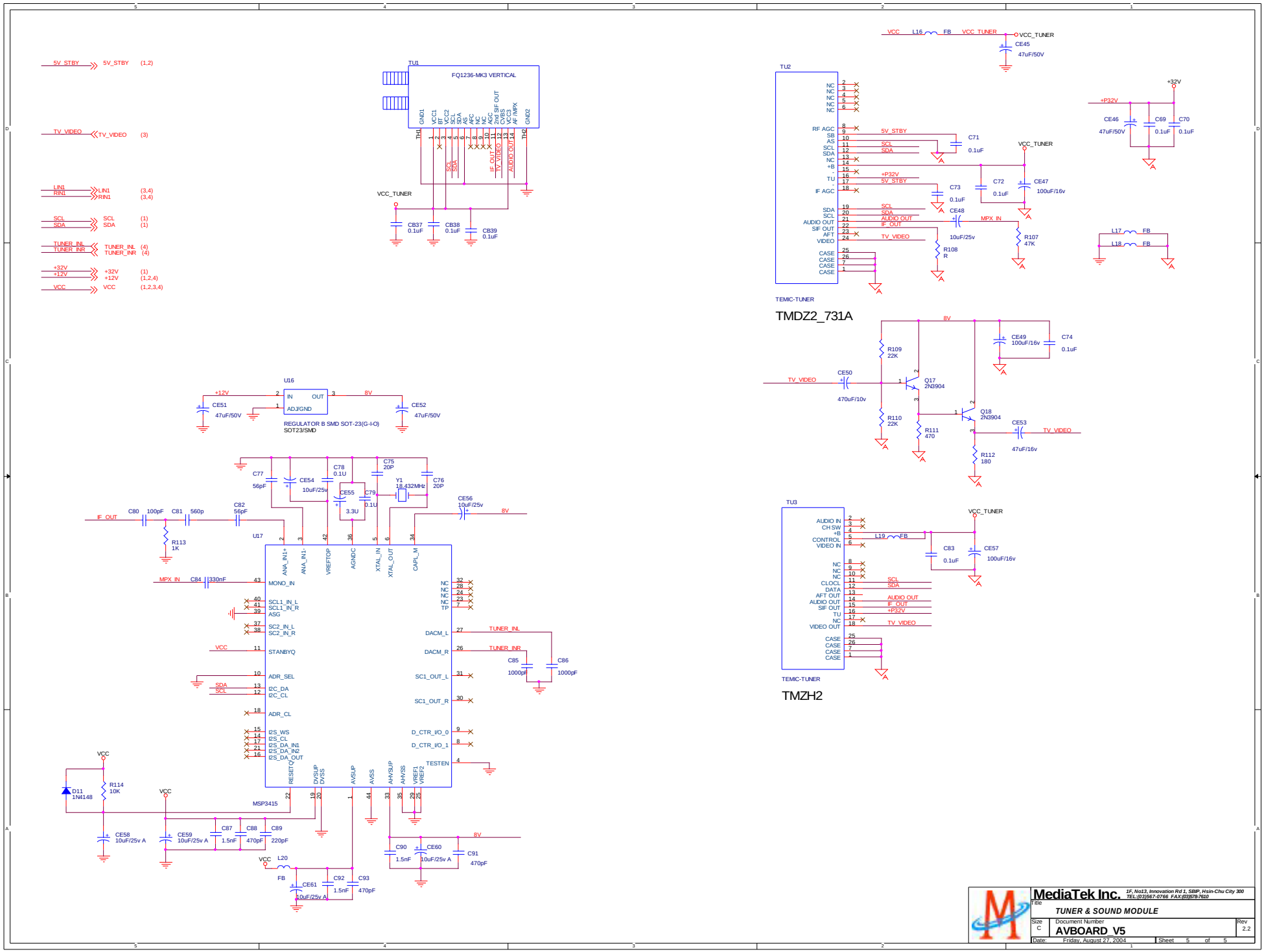
5V_STBY 5V_STBY (1,2)
TV_VIDEO TV_VIDEO (3)
LIN1 LIN1 (3,4)
RIN1 RIN1 (3,4)
SCL SCL (1)
SDA SDA (1)
TUNER_INL TUNER_INL (4)
TUNER_INR TUNER_INR (4)
+32V +32V (1)
+12V +12V (1,2,4)
VCC VCC (1,2,3,4)
TU1
FQ1236-MK3 VERTICAL
GND1 VCC1 BT VCC2 SCL SDA AS AFC NC NC AGC 2nd SIF OUT CVBS VCC3 AF IMPX GND2
TH1 TH2
IF_OUT TV_VIDEO AUDIO OUT
VCC_TUNER
CB37 0.1uF
CB38 0.1uF
CB39 0.1uF
VCC L16 FB VCC_TUNER
CE45 47uF/50V
TU2
NC RF AGC SB AS SCL SDA NC +B - TU - IF AGC SDA SCL AUDIO OUT SIF OUT AFT VIDEO CASE CASE CASE CASE
5V_STBY SCL SDA +P32V 5V_STBY SCL SDA AUDIO OUT IF_OUT TV_VIDEO
C71 0.1uF
C73 0.1uF
C72 0.1uF
CE47 100uF/16v
CE48 10uF/25v
MPX_IN
R107 47K
R108 R
TEMIC-TUNER
TMDZ2_731A
+32V
+P32V
CE46 47uF/50V
C69 0.1uF
C70 0.1uF
L17 FB
L18 FB
U16
+12V IN OUT 8V
ADJ/GND
CE51 47uF/50V
CE52 47uF/50V
REGULATOR B SMD SOT-23(G-I-O)
SOT23/SMD
C77 56pF
CE54 10uF/25v
C78 0.1U
CE55 3.3U
C79 0.1U
C75 20P
Y1 18.432MHz
C76 20P
CE56 10uF/25v
8V
IF_OUT
C80 100pF
C81 560p
C82 56pF
R113 1K
U17
ANA_IN1+ ANA_IN1- VREFTOP AGNDC XTAL_IN XTAL_OUT CAPL_M
MPX_IN C84 330nF
MONO_IN
SCL1_IN_L SCL1_IN_R ASG
SC2_IN_L SC2_IN_R
VCC STANBYQ
ADR_SEL
SDA SCL I2C_DA I2C_CL
ADR_CL
I2S_WS I2S_CL I2S_DA_IN1 I2S_DA_IN2 I2S_DA_OUT
RESETQ DVSUP DVSS AVSUP AVSS AHVSUP AHVSS VREF1 VREF2
NC NC NC NC TP
DACM_L TUNER_INL
DACM_R TUNER_INR
C85 1000pF
C86 1000pF
SC1_OUT_L
SC1_OUT_R
D_CTR_I/O_0
D_CTR_I/O_1
TESTEN
MSP3415
VCC
D11 1N4148
R114 10K
CE58 10uF/25v A
CE59 10uF/25v A
C87 1.5nF
C88 470pF
C89 220pF
L20 FB
CE61 10uF/25v A
C92 1.5nF
C93 470pF
C90 1.5nF
CE60 10uF/25v A
C91 470pF
8V
R109 22K
CE50 470uF/10v
TV_VIDEO
Q17 2N3904
R110 22K
R111 470
Q18 2N3904
CE53 47uF/16v
R112 180
CE49 100uF/16v
C74 0.1uF
TU3
AUDIO IN CH SW +B CONTROL VIDEO IN NC NC NC CLOCL DATA AFT OUT AUDIO OUT SIF OUT TU NC VIDEO OUT CASE CASE CASE CASE
L19 FB
C83 0.1uF
CE57 100uF/16v
SCL SDA AUDIO OUT IF_OUT +P32V TV_VIDEO
TEMIC-TUNER
TMZH2
MediaTek Inc.
1F, No13, Innovation Rd 1, SBIP, Hsin-Chu City 300
TEL:(03)567-0766 FAX:(03)5676610
Title
TUNER & SOUND MODULE
Size C
Document Number
AVBOARD_V5
Rev 2.2
Date: Friday, August 27, 2004
Sheet 5 of 5

MT8105SDR_SANYO_V5

MT8105B (LQFP256) DVR DEMO BOARD 2 LAYERS

1 INDEX & POWER, MUTE
2 MT8105B
3 MEMORY
4 FLASH
5 IDE
6 AUDIO DAC
7 1394&USB
8 OUTPUT

Rev	History	P#	Date
V1	The original released.		2004/03/18
V1.1	Change U17's input source from 33V to VCC.	8	2004/04/01
	Change R94, R96 and R97 to 15K Ohm.	11	
	Add R2, R3 and R145 Pull-down resistors on net IIN3, IIN2 and IINR.	11	
	Swap CON3's odd pin and even pin.	7	
	Change CON3 from 48 pin to 50 pin.	7	
	Add +12V and -12V net in CON3's pin-1 and pin-2.	7	
V2			2004/04/27
V5	Change U19 from AAC1117 to AZ1084.	1	2004/05/17
	Change U19's package from SOT223 to TO-252.	1	
	Change U1 input power from 5V_STBY to 33V_STBY.	1	
	Change D2's pin-1 connection from 18V to DV25.	2	
	Change MT1818,MT8105 crystal circuit for thrice resonance crystal.		
	Change J5 connection for new K-POWER.		
V6	Add SCART out control pin.		2004/07/12
	Add USB Vbus chip.		
	Change RTC Power net		2004/07/22
	Add VGA output.		2004/07/27

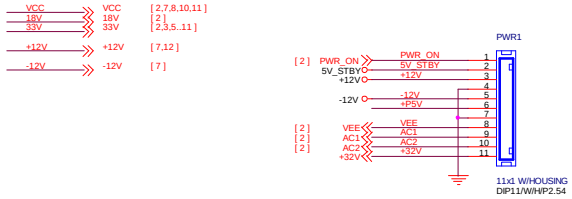

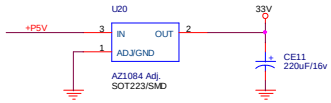

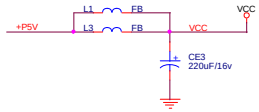

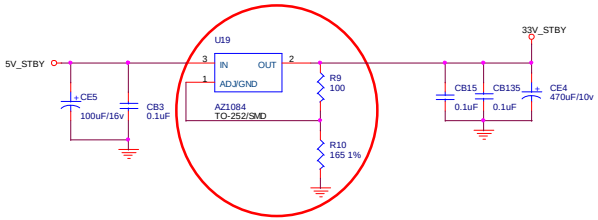

Vout = 1.25 x (1 + R10 / R9)

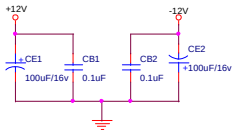

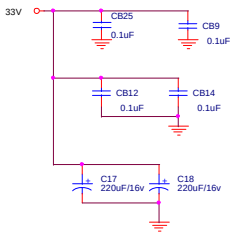

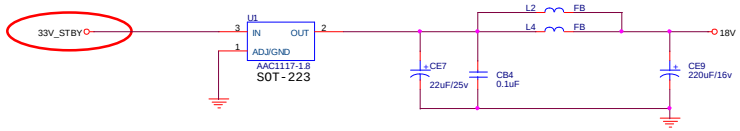

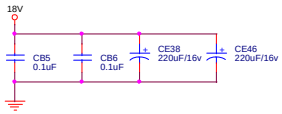

MediaTek Confidential

MediaTek Inc. No.1-2, Innovation Rd 1, SBIP, Hsin-Chu City 300 TEL:(03)567-0766 FAX:(03)578-7610

Title: INDEX			
Size: C	Document Number: MT8105SDR_SANYO_V5	Drawn	Rev: 2.1
Date: Tuesday, July 27, 2004		Sheet 1 of 12	

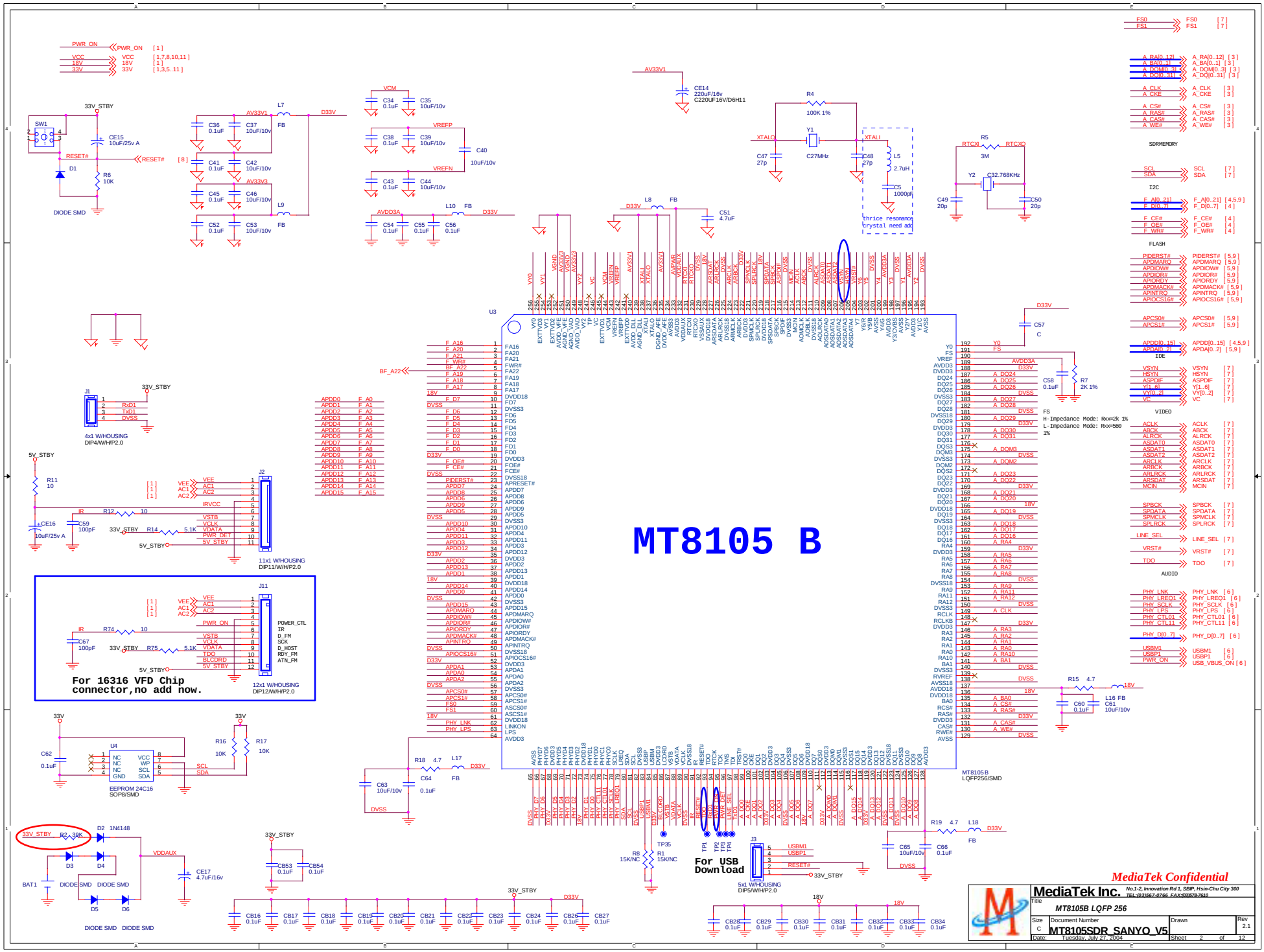
MT8105 B
MT8105B
LQFP256/SMD
U3
For 16316 VFD Chip connector,no add now.
For USB Download
J1
4x1 W/HOUSING
DIP4/W/HP2.0
J2
11x1 W/HOUSING
DIP11/W/HP2.0
J11
12x1 W/HOUSING
DIP12/W/HP2.0
J3
5x1 W/HOUSING
DIP5/W/HP2.0
U4
EEPROM 24C16
SOP8/SMD
SW1
DIODE SMD
SDRMEMORY
I2C
FLASH
VIDEO
AUDIO
IDE
FS
H-Impedance Mode: Rx=2k 1%
L-Impedance Mode: Rx=560 1%
MediaTek Confidential
MediaTek Inc.
No.1-2, Innovation Rd 1, SBIP, Hsin-Chu City 300
TEL:(03)567-0766 FAX:(03)578-7610
Title
MT8105B LQFP 256
Size C
Document Number
MT8105SDR_SANYO_V5
Rev 2.1
Date: Tuesday, July 27, 2004
Sheet 2 of 12

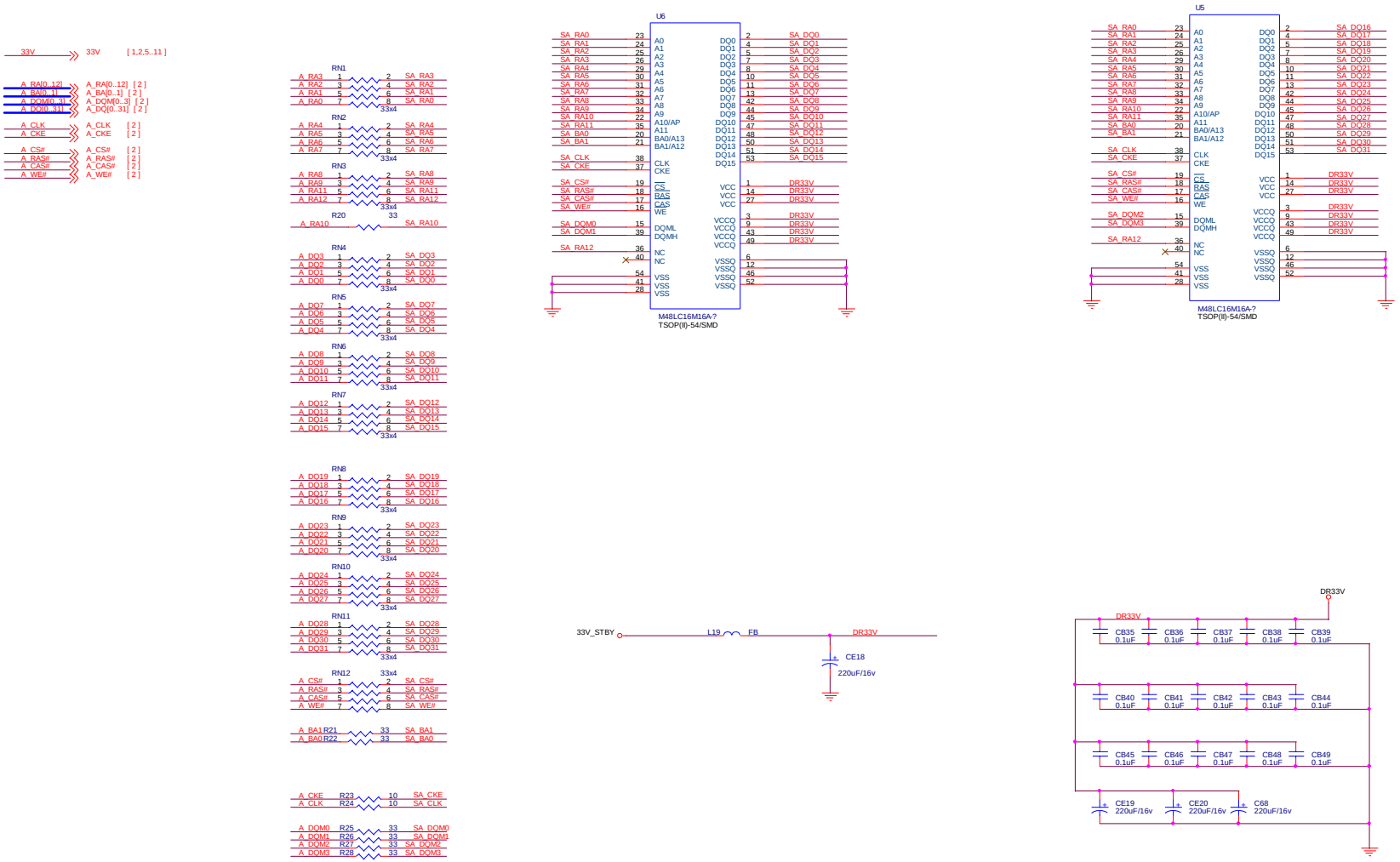

MediaTek Confidential

MediaTek Inc. No.1-2, Innovation Rd 1, SBIP, Hsin-Chu City 300 TEL:(03)567-0766 FAX:(03)578-7610			
Title: *SDRAM MEMORY*			
Size: C	Document Number: MT8105SDR_SANYO_V5	Drawn	Rev: 2.1
Date: Tuesday, July 27, 2004		Sheet 3 of 12	

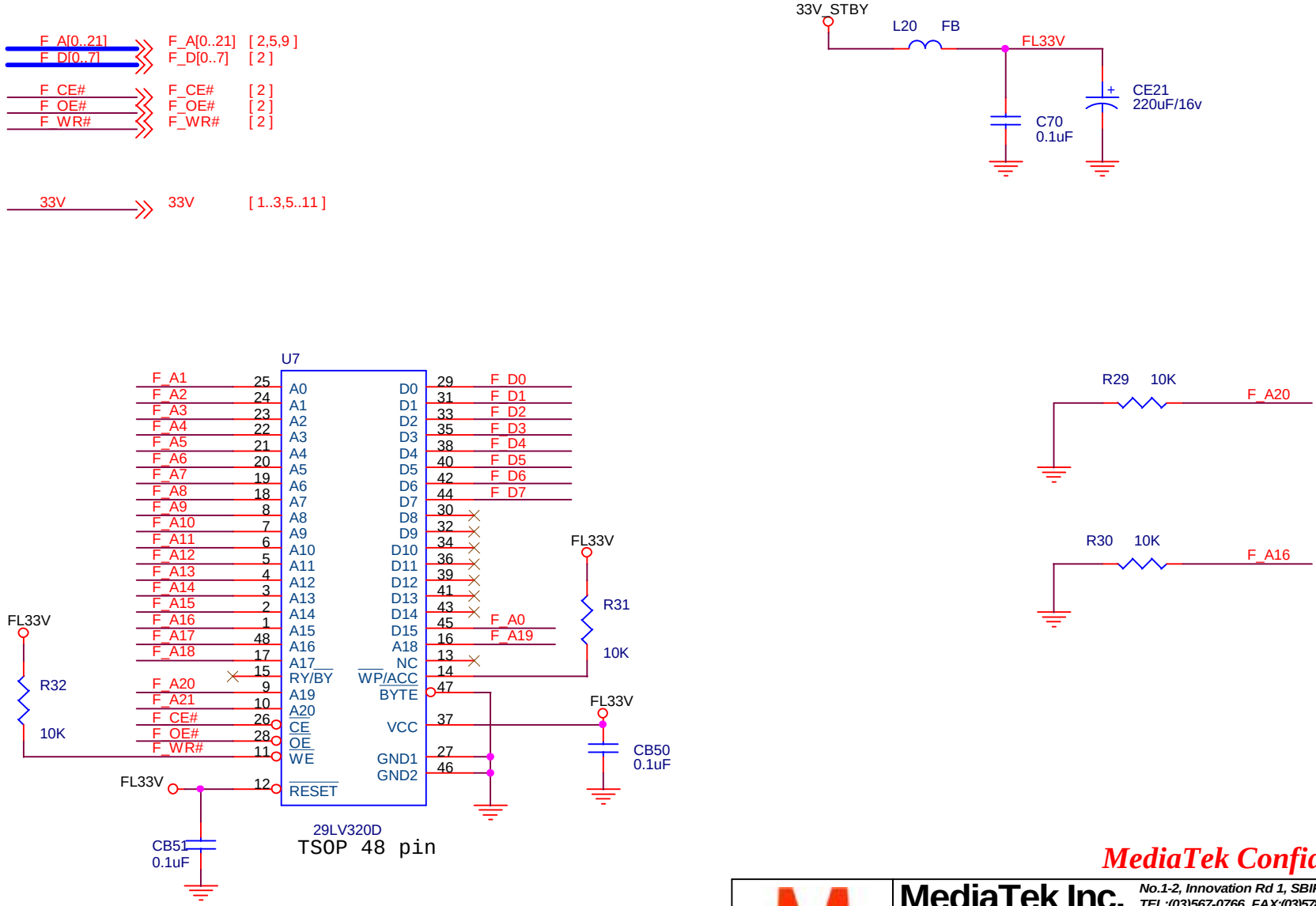

MediaTek Confidential

MediaTek Inc. *No.1-2, Innovation Rd 1, SBIP, Hsin-Chu City 300*
TEL:(03)567-0766 FAX:(03)578-7610

Title: ***FLASH***

Size	Document Number	Drawn	Rev
A	MT8105SDR_SANYO_V5		2.1

Date: Tuesday, July 27, 2004 Sheet 4 of 12

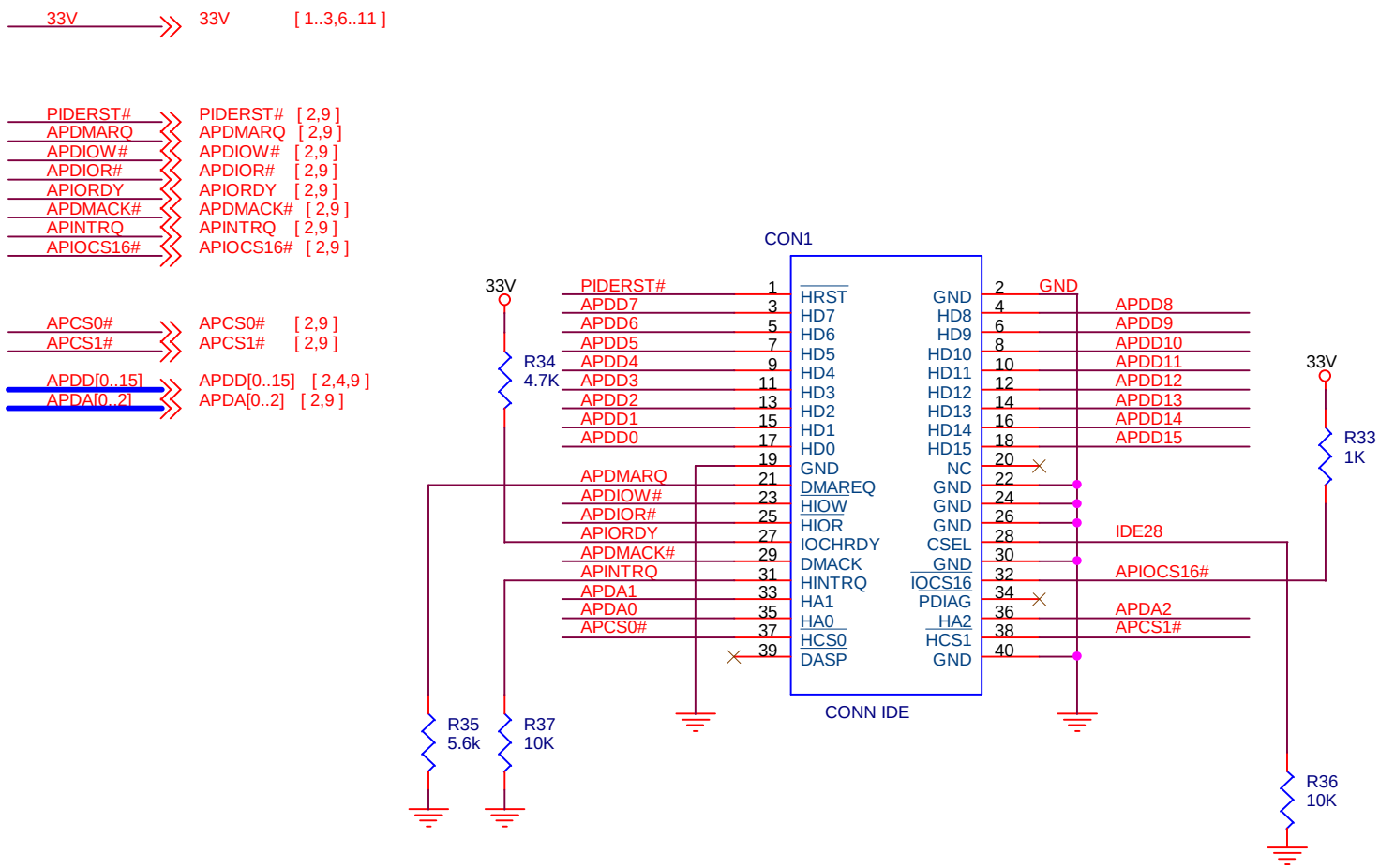

MediaTek Confidential

MediaTek Inc. *No.1-2, Innovation Rd 1, SBIP, Hsin-Chu City 300 TEL:(03)567-0766 FAX:(03)578-7610*

Title: ***IDE I/F***

Size	Document Number	Drawn	Rev
A	**MT8105BSD_V5mainboard**		2.1
Date: Tuesday, July 27, 2004		Sheet 5 of 12	

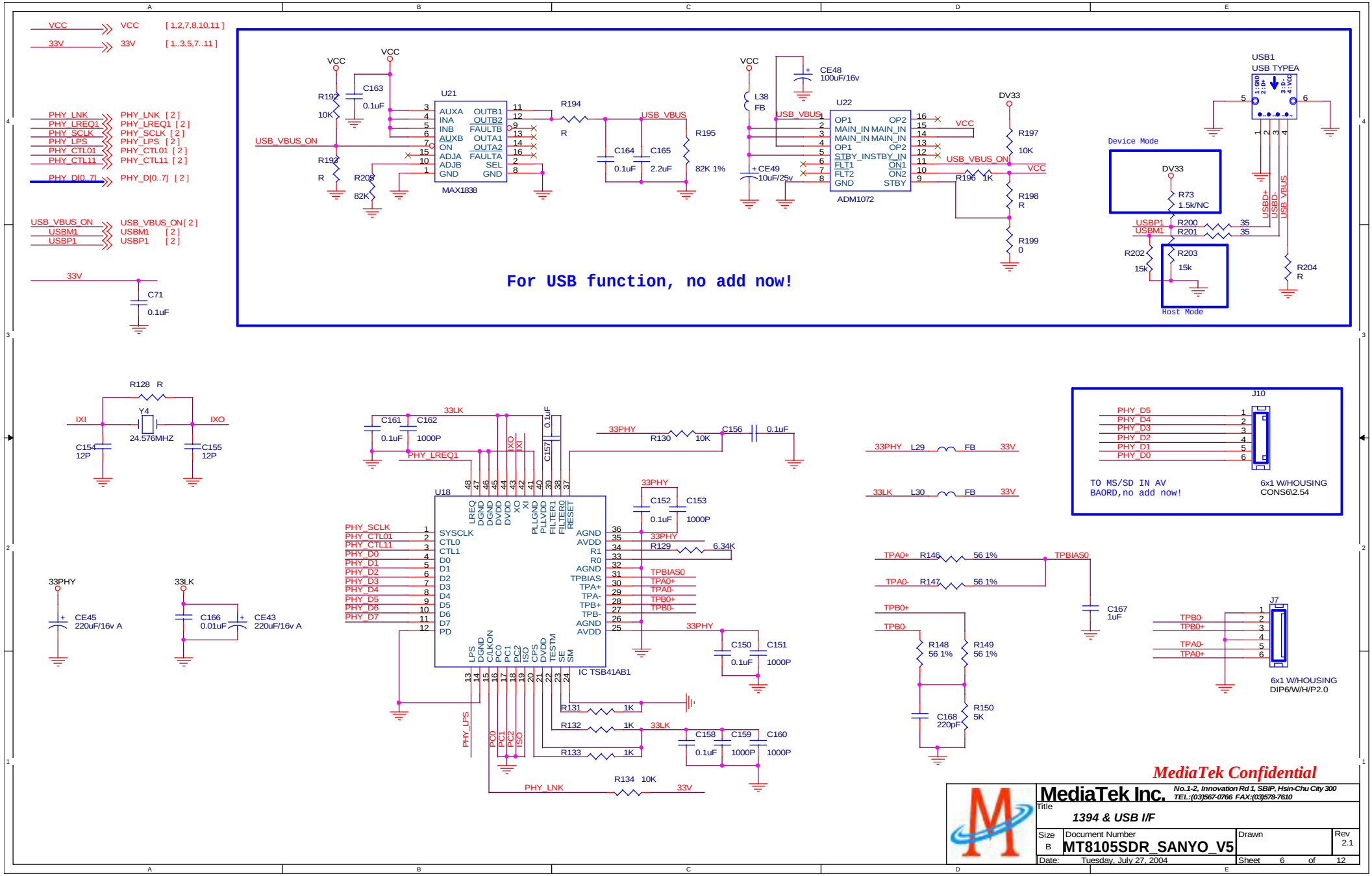
VCC [1,2,7,8,10,11]
33V [1..3,5,7..11]
PHY_LNK PHY_LNK [2]
PHY_LREQ1 PHY_LREQ1 [2]
PHY_SCLK PHY_SCLK [2]
PHY_LPS PHY_LPS [2]
PHY_CTL01 PHY_CTL01 [2]
PHY_CTL11 PHY_CTL11 [2]
PHY_D[0..7] PHY_D[0..7] [2]
USB_VBUS_ON USB_VBUS_ON [2]
USBM1 USBM1 [2]
USBP1 USBP1 [2]
U21
MAX1838
U22
ADM1072
USB1
USB TYPEA
Device Mode
Host Mode
For USB function, no add now!
R128 R
Y4
24.576MHZ
IXI
IXO
U18
IC TSB41AB1
J10
TO MS/SD IN AV BAORD,no add now!
6x1 W/HOUSING CONS6\2.54
J7
6x1 W/HOUSING DIP6/W/H/P2.0
MediaTek Confidential
MediaTek Inc.
No.1-2, Innovation Rd 1, SBIP, Hsin-Chu City 300
TEL:(03)567-0766 FAX:(03)578-7610
Title
1394 & USB I/F
Size B
Document Number MT8105SDR_SANYO_V5
Drawn
Rev 2.1
Date: Tuesday, July 27, 2004
Sheet 6 of 12

+32V	+32V	
+12V	+12V	[1,12]
-12V	-12V	[1]
VCC	VCC	[1,2,8,10,11]
33V	33V	[1..3,5,6,8..11]
ACLK	ACLK	[2]
ABCK	ABCK	[2]
ALRCK	ALRCK	[2]
ASDAT0	ASDAT0	[2]
ASDAT1	ASDAT1	[2]
ASDAT2	ASDAT2	[2]
ARCLK	ARCLK	[2]
ARBCK	ARBCK	[2]
ARLRCK	ARLRCK	[2]
ARSDAT	ARSDAT	[2]
MCIN	MCIN	[2]
SCL	SCL	[2]
SDA	SDA	[2]
SPBCK	SPBCK	[2]
SPDATA	SPDATA	[2]
SPMCLK	SPMCLK	[2]
SPLRCK	SPLRCK	[2]
LINE_SEL	LINE_SEL	[2]
VRST#	VRST#	[2]
TDO	TDO	[2]
ASPDIF	ASPDIF	[2]
Y[1..6]	Y[1..6]	[2]
VY[0..2]	VY[0..2]	[2]
VC	VC	[2]
VSYN	VSYN	[2]
HSYN	HSYN	[2]
FS0	FS0	[2]
FS1	FS1	[2]

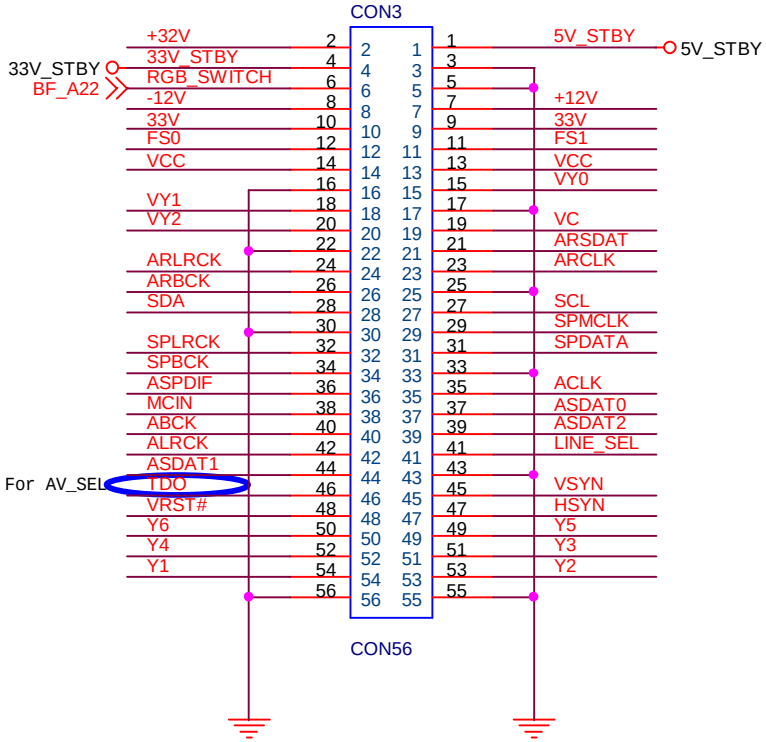

MediaTek Confidential

MediaTek Inc. *No.1-2, Innovation Rd 1, SBIP, Hsin-Chu City 300 TEL:(03)567-0766 FAX:(03)578-7610*

Title: ***AV PORT***

Size	Document Number	Drawn	Rev
A	MT8105SDR_SANYO_V5	`	2.1

Date: Tuesday, July 27, 2004 | Sheet 7 of 12

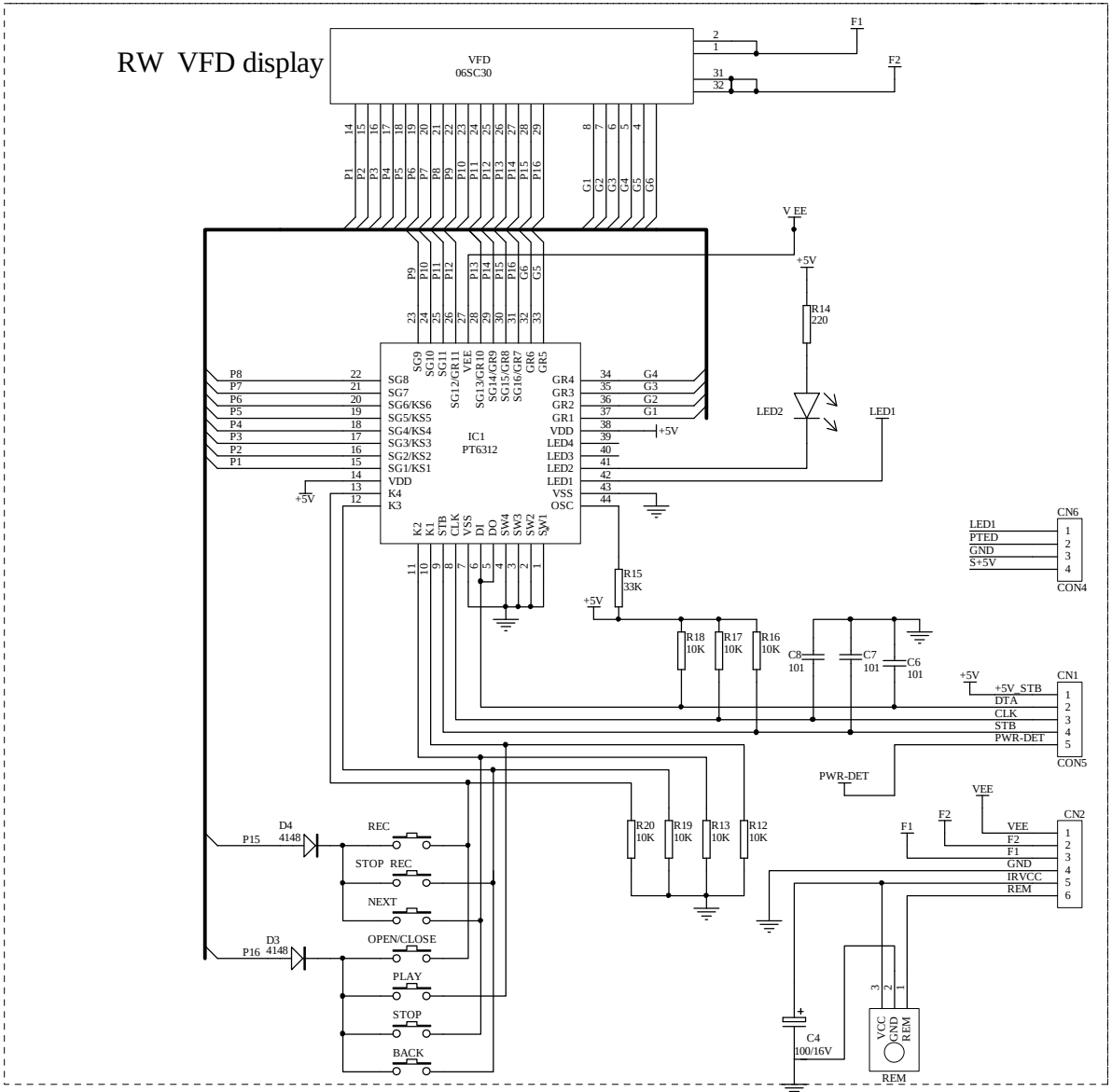

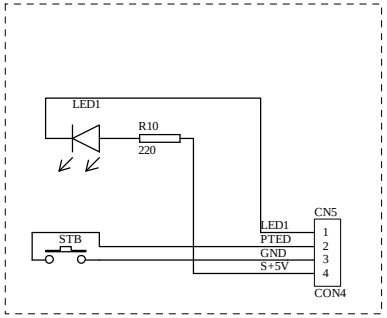

Title		
Size B	Number	Revision
Date: 13-Jan-2005	Sheet of	
File: F:\整机file\data\DVD刻录机\MT8105 HW INFO\生产文件\MTK RW		

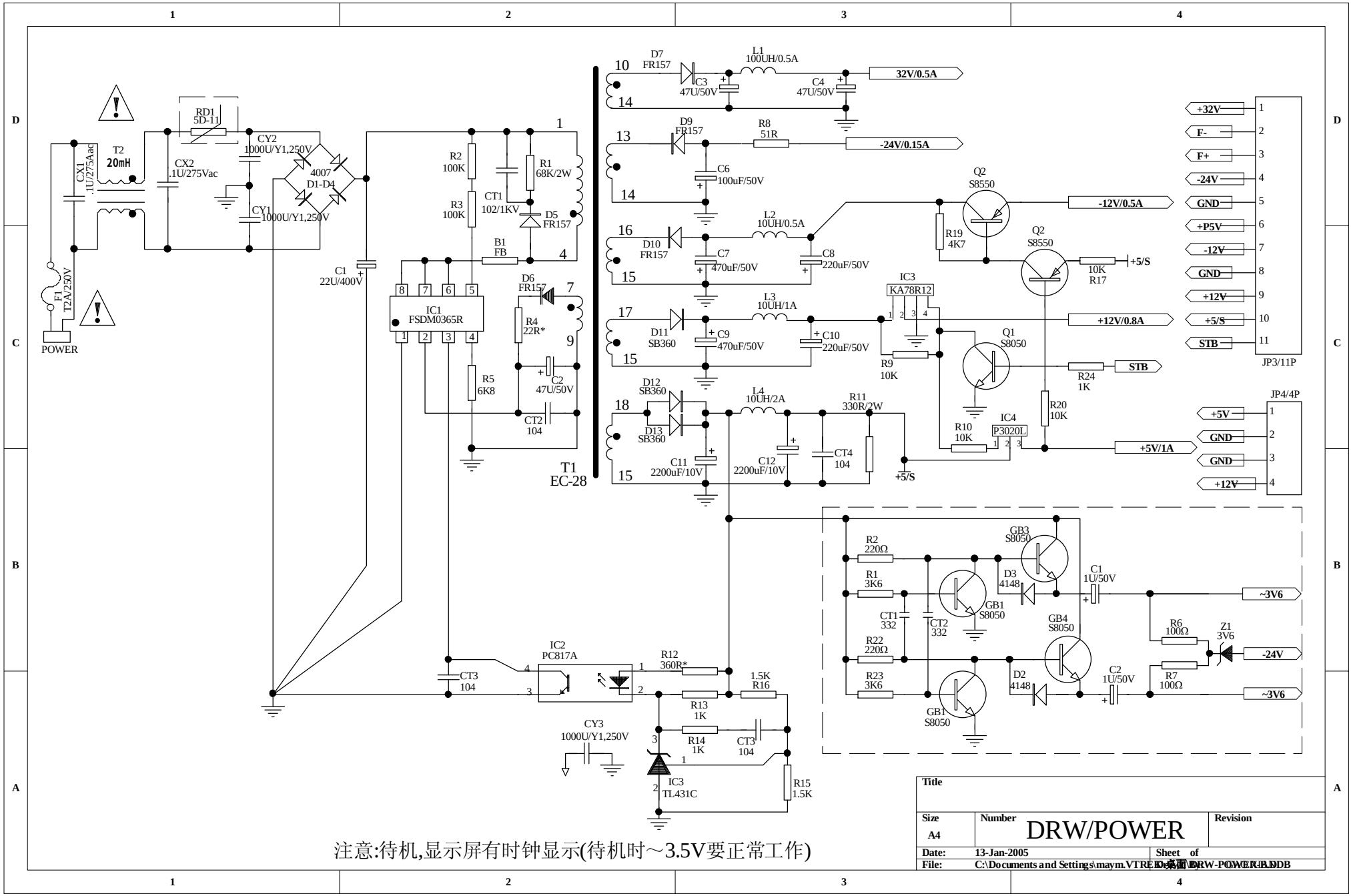

注意:待机,显示屏有时钟显示(待机时～3.5V要正常工作)

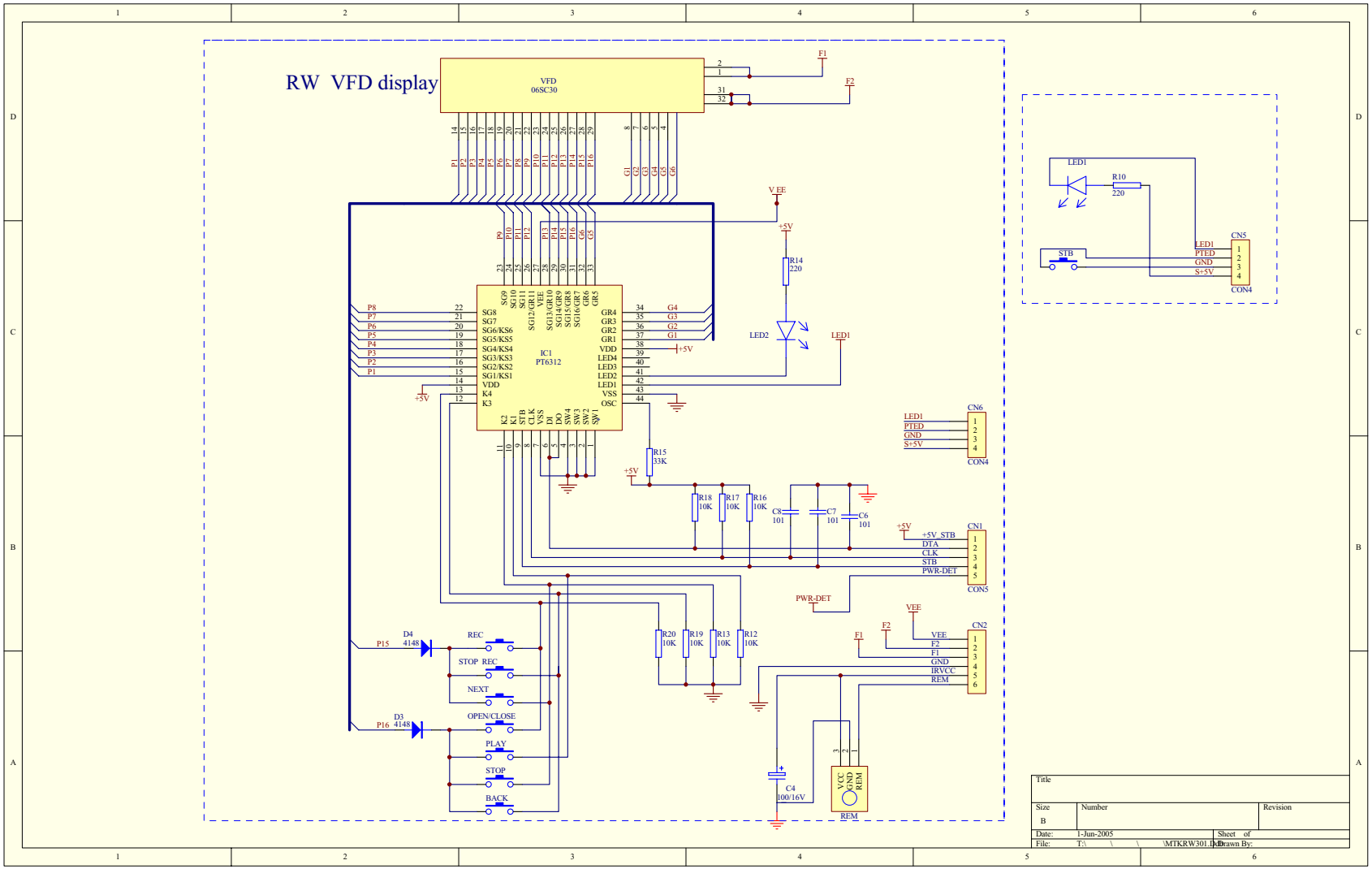
RW VFD display
VFD
06SC30
F1
F2
VEE
+5V
R14
220
LED2
LED1
IC1
PT6312
R15
33K
R18
10K
R17
10K
R16
10K
C8
101
C7
101
C6
101
CN6
CON4
CN1
CON5
+5V_STB
DTA
CLK
STB
PWR-DET
CN2
VEE
F2
F1
GND
IRVCC
REM
R20
10K
R19
10K
R13
10K
R12
10K
D4
4148
D3
4148
REC
STOP REC
NEXT
OPEN/CLOSE
PLAY
STOP
BACK
C4
100/16V
VCC
GND
REM
LED1
R10
220
STB
CN5
CON4
Title
Size
B
Number
Revision
Date: 1-Jun-2005
Sheet of
File: T:\ \ \ \MTKRW301.DDB
Drawn By:

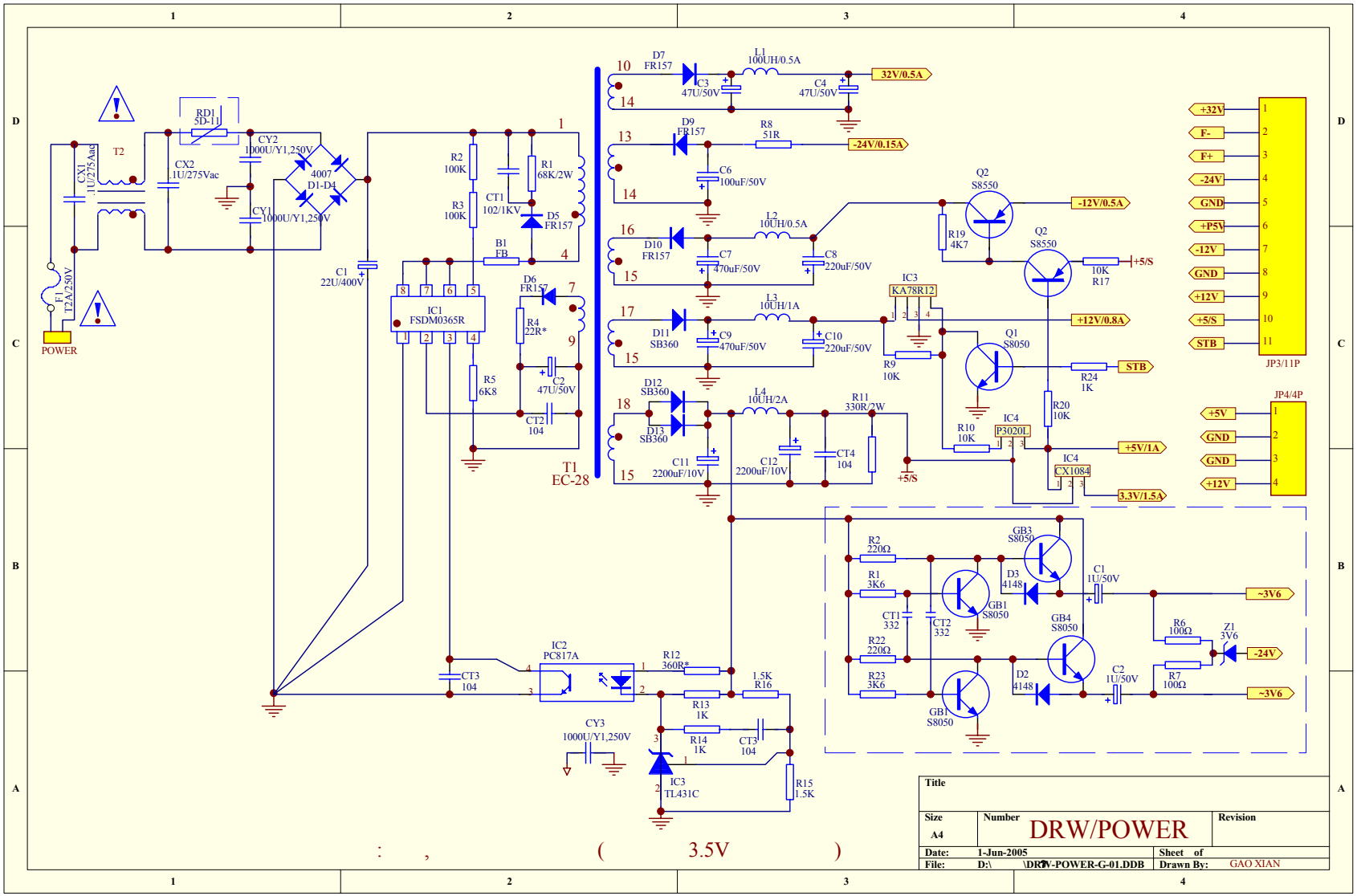
POWER
F1
T2A/250V
CX1
1U/275Aac
T2
RD1
5D-11
CX2
1U/275Vac
CY2
1000U/Y1,250V
CY1
1000U/Y1,250V
4007
D1-D4
C1
22U/400V
R2
100K
R3
100K
CT1
102/1KV
R1
68K/2W
D5
FR157
B1
FB
D6
FR157
R4
22R*
C2
47U/50V
CT2
104
R5
6K8
IC1
FSDM0365R
T1
EC-28
D7
FR157
C3
47U/50V
L1
100UH/0.5A
C4
47U/50V
32V/0.5A
D9
FR157
R8
51R
-24V/0.15A
C6
100uF/50V
D10
FR157
C7
470uF/50V
L2
10UH/0.5A
C8
220uF/50V
D11
SB360
C9
470uF/50V
L3
10UH/1A
C10
220uF/50V
D12
SB360
D13
SB360
C11
2200uF/10V
L4
10UH/2A
C12
2200uF/10V
R11
330R/2W
CT4
104
+5/S
IC3
KA78R12
R9
10K
Q2
S8550
R19
4K7
-12V/0.5A
Q2
S8550
10K
R17
+5/S
+12V/0.8A
Q1
S8050
R24
1K
STB
R20
10K
IC4
P3020L
R10
10K
IC4
CX1084
+5V/1A
3.3V/1.5A
JP3/11P
+32V
F-
F+
-24V
GND
+P5V
-12V
GND
+12V
+5/S
STB
JP4/4P
+5V
GND
GND
+12V
R2
220Ω
R1
3K6
CT1
332
CT2
332
R22
220Ω
R23
3K6
GB3
S8050
GB1
S8050
GB4
S8050
GB1
S8050
D3
4148
D2
4148
C1
1U/50V
C2
1U/50V
R6
100Ω
R7
100Ω
Z1
3V6
~3V6
-24V
~3V6
IC2
PC817A
CT3
104
R12
360R*
R13
1K
R14
1K
CT3
104
1.5K
R16
R15
1.5K
CY3
1000U/Y1,250V
IC3
TL431C
: , (3.5V)
Title
Size
A4
Number
DRW/POWER
Revision
Date: 1-Jun-2005
Sheet of
File: D:\ \DRW-POWER-G-01.DDB
Drawn By: GAO XIAN